MODEL SM56

UNIDIRECTIONAL DYNAMIC MICROPHONE

GENERAL

The Model SM56 is a slender, moving coil (dynamic) microphone, built to provide wide range reproduction of music and voice and featuring an exceptionally uniform and effective unidirectional pickup pattern. The performance characteristics and unique construction make it ideal for studio and remote use in broadcasting, recording, motion picture, and critical sound reinforcement applications.

Microphone Features:

- Unusually effective cardioid pickup pattern minimizes effects of studio acoustics and background noise. Rear and side rejection uniform to very low frequencies and completely symmetrical about the axis
- Bright, clean sound. Especially effective for announcing, narration and dialogue, vocal music, and rhythm pickups
- Cartridge and microphone body separately shock mounted for quiet operation
- Convenient impedance selection

SPECIFICATIONS

Type
Dynamic

Frequency Response
40 to 15,000 Hz (See Figure 1)

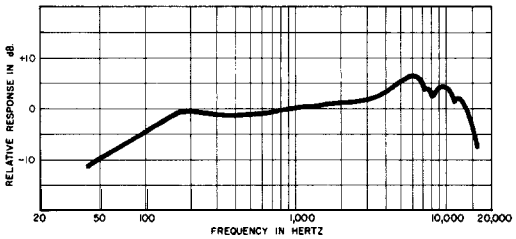

TYPICAL FREQUENCY RESPONSE
FIGURE 1

Polar Pattern
Cardioid (unidirectional) response. Uniform with frequency, symmetrical about axis (See Figure 2)

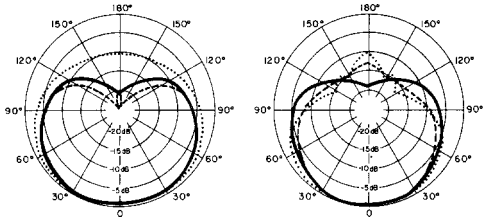

TYPICAL POLAR PATTERNS
FIGURE 2

impedance
Dual. Microphone rating impedance "L" is 38 ohms (70 ohms actual) and microphone rating impedance "H" is 150 ohms (300 ohms actual) for connection to microphone inputs rated at 19 to 300 ohms. Shipped with impedance switch at 150 ohms ("H" position)

Output Level (at 1,000 Hz)

	"L"	"H"
Open Circuit Voltage*	-82.0 dB (.079 mV)	- 75.5 dB (.167 mV)
Power Level**	-56.5 dB	-56.5 dB

*0 dB = 1 volt per microbar
**0 dB = 1 milliwatt per 10 microbars

Switch
Built-in slotted impedance switch

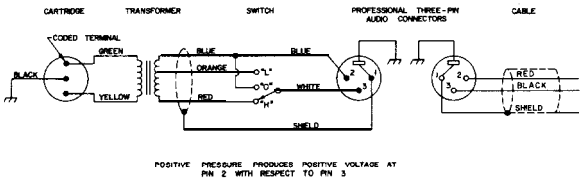

INTERNAL CONNECTIONS
FIGURE 3

Cartridge Shock Mount
Internal rubber vibration-isolator

SHURE®
MODEL SM56
UNIDIRECTIONAL DYNAMIC MICROPHONE

222 HARTREY AVENUE, EVANSTON, ILLINOIS 60204 U.S.A. • TELEPHONE: (312)866-2200 • CABLE: SHUREMICRO

Copyright 1985, Shure Brothers Inc.
27A2115(ED)

Printed in U.S.A.

Cable
6.1m (20 ft) two-conductor shielded, with professional three,-socket audio connector designed to mate with Cannon XL series, Switchcraft A3 (Q.G.) series, or equivalent connector

Swivel and Shock Mount Assembly
Positive action, permits tilting head through 180°, shock mounted with internal rubber vibration-isolator, suitable for mounting on stand with 5/8"-27 thread

Case
Dark gray enameled die casting and polycarbonate with stainless steel screen

Dimensions
See Figure 4

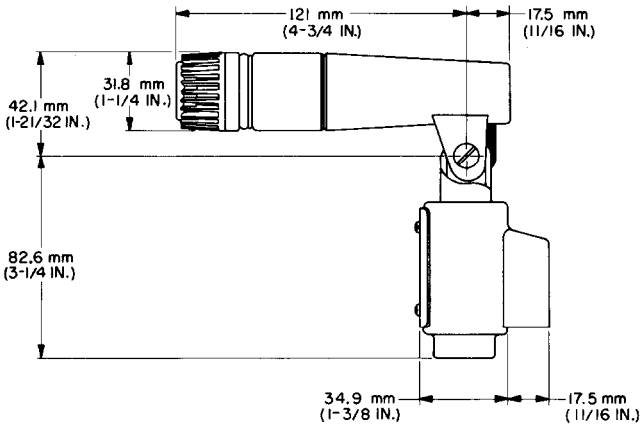

OVERALL DIMENSIONS
FIGURE 4

Net Weight (less cable)
1.01 kg (2 lb, 3½ oz)

Packaged Weight
1.33 kg (2 lb, 15 oz)

ARCHITECTS' SPECIFICATIONS

The microphone shall be a moving-coil (dynamic) type with a frequency response of 40 to 15,000 Hz. The unit shall have a cardioid polar characteristic. The cancellation at the sides shall be approximately 6 dB, and the cancellation at the rear shall be 15 to 20 dB. The microphone shall be a dual-impedance unit with rated impedances of 38 ohms and 150 ohms for connection to microphone inputs rated at 19 to 300 ohms. Impedance change shall be by means of a three-position Impedance-Off switch for setting the microphone for 38 ohms ("L" position), 150 ohms ("H" position), or Off ("O" position).

The microphone output shall be -56.5 dB where 0 dB = 1 milliwatt per 10 microbars.

The microphone shall be provided with a vibration-isolator in combination with a swivel adjustable through 180°. The microphone shall be suitable for mounting on a stand with a 5/8"-27 thread. The microphone shall also be provided with a detachable 6.1 m (20 ft) two-conductor shielded cable with a professional three-socket audio connector* at the microphone end.

The overall dimensions of the microphone shall be 125 mm (4-29/32 in.) in length, 31.4 mm (1¼ in.) in width, and-156 mm (6-1/8 in.) in depth.

The microphone shall be the Shure Model SM56 or equivalent.

"Designed to mate with a Cannon XL series, Switchcraft A3 (Q.G.) series or equivalent connector.

IMPEDANCE SELECTION

Remove the impedance switch cover plate by removing the two 2-56 binding head machine screws at each end of the cover plate. The center position of the slotted Impedance-Off switch is the Off position; counterclockwise (as shipped) is the 150-ohm position; clockwise is the 38-ohm position. Select the desired switch position, replace the impedance switch cover plate, and secure with the two 2-56 binding head machine screws.

OPTIONAL ACCESSORIES

Windscreen A2WSA
Extension Cable C20H

REPLACEMENT PARTS

Dynamic Cartridge R57
Cable and Plug Assembly C2OD
Plug Element 65A67

GUARANTEE

This Shure product is guaranteed in normal use to be free from electrical and mechanical defects for a period of one year from date of purchase. Please retain proof of purchase date. This guarantee includes all parts and labor. This guarantee is in lieu of any and all other guarantees or warranties, express or implied, and there shall be no recovery for any consequential or incidental damages.

SHIPPING INSTRUCTIONS

Carefully repack the unit, have it insured, and return it prepaid to:

Shure Brothers Incorporated
Attention: Service Department
222 Hartrey Avenue
Evanston, Illinois 60204

If outside the United States, return the unit to your dealer or Authorized Shure Service Center for repair. The unit will be returned to you prepaid.