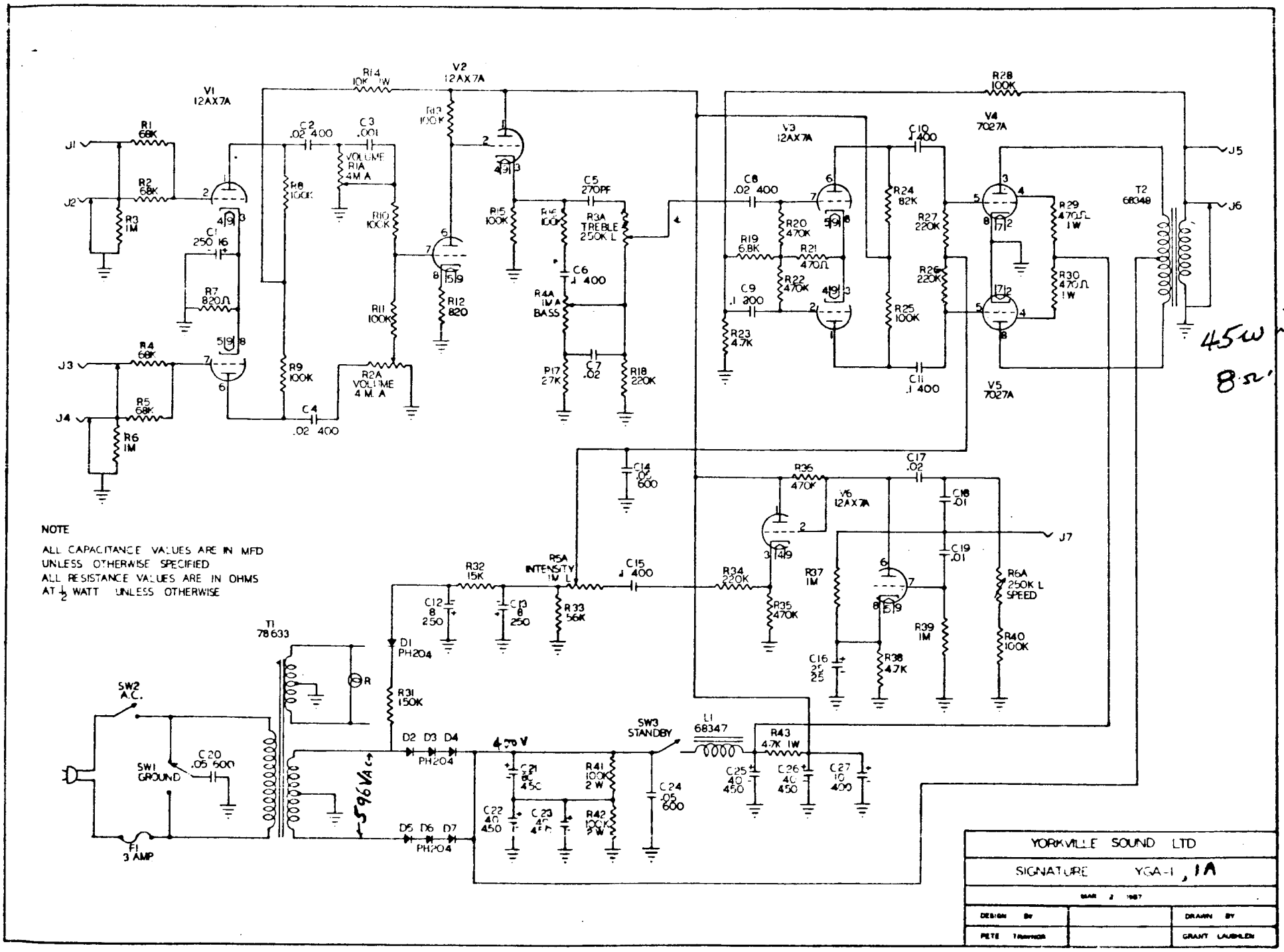

NOTE

ALL CAPACITANCE VALUES ARE IN MFD
UNLESS OTHERWISE SPECIFIED
ALL RESISTANCE VALUES ARE IN OHMS
AT ½ WATT UNLESS OTHERWISE

YORKVILLE SOUND LTD		
SIGNATURE YGA-1, 1A		
MAR 2 1987		
DESIGN BY		DRAWN BY
PETE Trainor		GRANT LAUBALEN